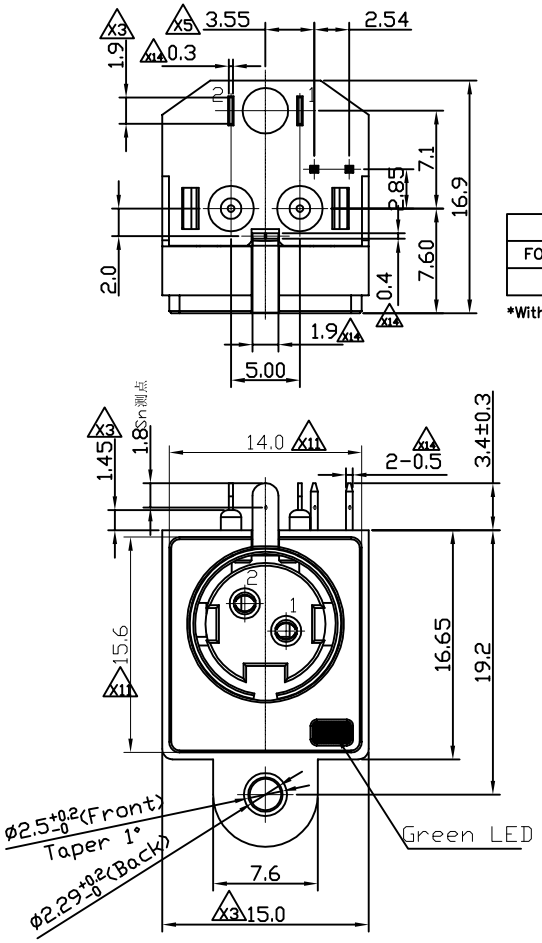

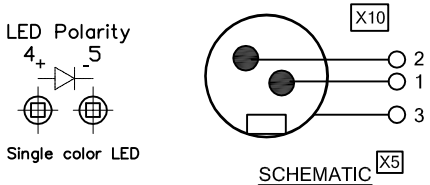

LED Specification		
FORWARD V(MAX)	*(TYP)	WAVELENGTH
2.5V	1.9V	571±6.5nm

X12

*With a forward current of 20mA(TYP)

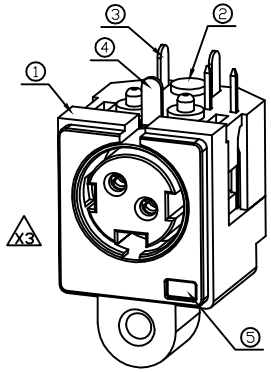

REV.	ECN. NO.	DESCRIPTION	ENG	DATE
X1		ISSUED	Kevin	07/04/11'
X2		ADD SCREW BOSS AND MOVE LED PCB LAYOUT	AXL	7/12/11'
X3		REMOVE ONE PIN AND CHANGE TITLE TO 2PINS AND PCB LAYOUT	AXL	7/22/11'
X4		CHANGE GROUND THICKNESS ADD LOGO	Kevin	7/27/11'
X5		CHANGE LED PCB LAYOUT	AXL	7/28/11'
X6		CHANGE LED PCB LAYOUT	AXL	7/28/11'
X7		CHANGED ONE DIMENSION	Jeff	08/08/11'
X8		MODIFY SCREW HOLE AND ADD NOTES 8	Kevin	09/21/11'
X9		UPDATE LED PLATING	Kevin	09/28/11'
X10		ADD SCHEMATIC	AXL	10/19/11'
X11		ADD RECOMMENDED PANEL CUTOUT AND DIMENSIONS AND SOLDER TAIL SHAPE	AXL	2/1/12'
X12		ADD LED WAVELENGTH AND EDIT NOTES 7	AXL	8/28/13'
X13		ADD WAVE SOLDER CONDITION PEAK TEMPERATURE	Knight	7/15/14'
X14		MODIFY LAYOUT PCB HOLE BIT SHAPE ADDED DIMENSION	Lucky	8/3/16'

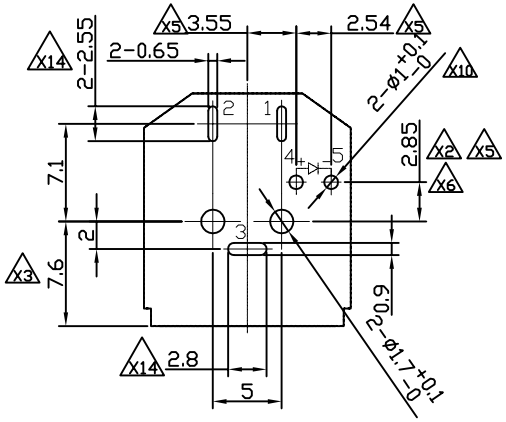

Recommended P.C.B Layout
Bottom View
P.C.B Tolerances:±0.05mm

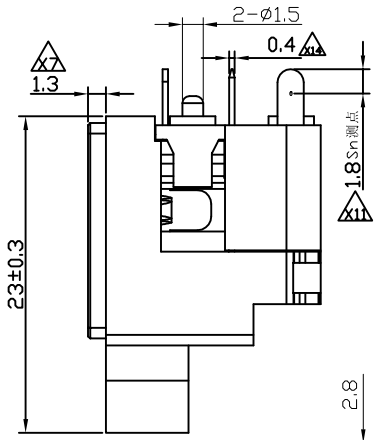

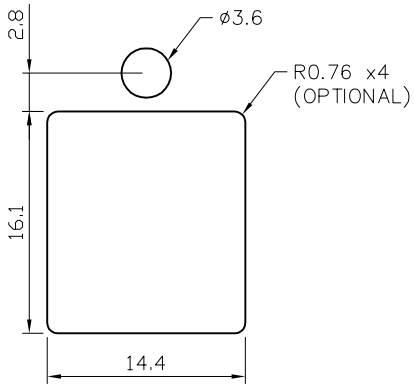

X11 RECOMMENDED PANEL CUTOUT
TOLERANCE: ±0.127mm
(PANEL THICKNESS: 0.8mm)

NOTES:
1. Rating: PIN 1&2: DC20V 7.5A Max.
2. CONTACT RESISTANCE: 30mΩ Max.
3. INSULATION RESISTANCE: DC250V 50MΩ Min.
4. VOLTGE WITHSTANDING: AC250V 1Minute.
5. INSERTION FORCE: 4.5kgf Max.
   WITHDRAWAL FORCE: 1.0kgf Min.
X8 6. RELEASE ANGLE OF SCREW HOLE: 1°
7. OPERATING TEMP: −25°C TO +85°C
X8 8. MOUNTING SCREW HOLE IS SIZED FOR PLASTITE NO.4 SCREW, MOUNTING TORQUE IS 40−51 N−cm.
X13 9. WAVE SOLDER CONDITION PEAK TEMPERATURE: 260°C

X9
X4 X8

ITEM	NAME	Q'TY	DESCRIPTION	MATERIAL	FINISH / COLOR	NOTE
5	LED	1		GREEN LIGHT COLOR	Ag 40u" plating	
4	GROUND	1		BRASS, T= 0.40±0.08	Tin 100u" plating	
3	PIN	2		PHOS. BRONZE, T=0.30±0.05	Tin 100u" plating	
2	COVER	1		PBT+15%GF, UL94V-0	COLOR BLACK	
1	BODY	1		PBT+15%GF, UL94V-0	COLOR BLACK	

GENERAL TOLERANCE: X.± 0.30, .X± 0.25, .XX± 0.20, .XXX±	ANGLE TOLERANCE: X°±, .X°±, .XX°±, .XXX°±	DRAWN: Kevin	DATE: 07/04/11'
MATL: SEE BOM		DESIGN	DATE
FINISH: SEE NOTES		CHECKED	DATE
SCALE: N/A	UNIT: mm	APPROVED	DATE
SHEET 1 OF 1			

PRELIMINARY
NOT RELEASED

genesis connected solutions

TITLE. X3
2 PINS POWER JACK W/ LED

PART NUMBER. GT14-200178

DRAWING NO. GT14-200178

SIZE A4

REV. X14