REV.	ECN. NO.	DESCRIPTION	ENG	DATE
A		ISSUED	AXL	11/22/05'
B		Remove Peg Option and Correct Tolerance	AXL	4/20/09'
C		UPDATED DRAWING	Jeff	12/06/13'
D		MODIFIED NOTES AND PCB LAYOUT	Jeff	12/19/13'
E		UPDATED PLATING	SUN	01/13/14'
F		ADD TOLERANCE ON PIN	AXL	3/21/14'

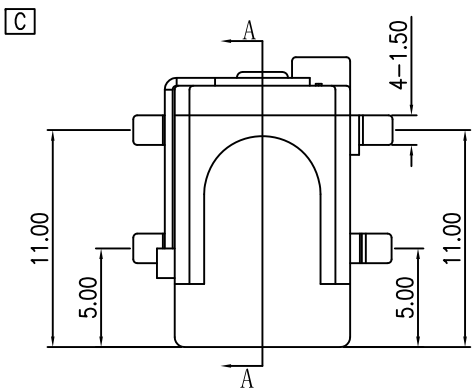

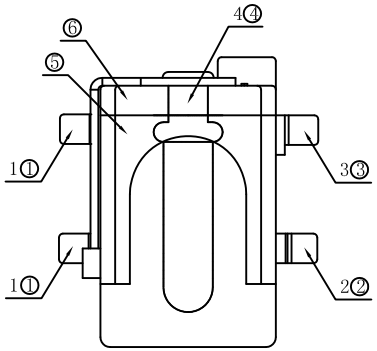

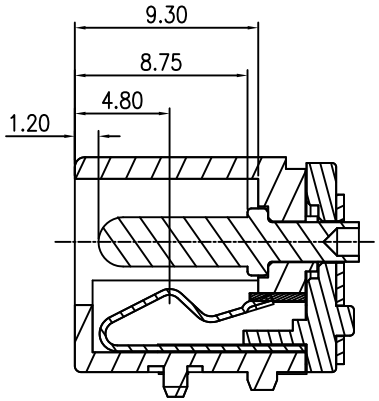

A-A SECTION

C
NOTES:
1. RATING: 16V DC, 5A MAX.
2. CONTACT RESISTANCE: 30mΩ MAX. (INITIAL);
D AFTER DURABILITY TEST: 50mΩ MAX.
3. DIELECTRIC WITHSTANDING VOLTAGE: 500V AC
4. INSULATION RESISTANCE: 100MΩ MIN.
5. INSERTION FORCE: 3N~20N
6. WITHDRAWAL FORCE: 3N~20N
7. DURABILITY: 5000 CYCLES
D 8. OPERATING TEMPERATURE: -20°C TO +75°C
D 9. REFLOW SOLDERING PROFILE: 260±5°C, 10 SECONDS
10. RoHS COMPLIANT

SDC224-X
└ CENTER PIN
A: $2.0\pm^{0}_{0.05}$ F
C B: $2.5\pm^{0}_{0.05}$

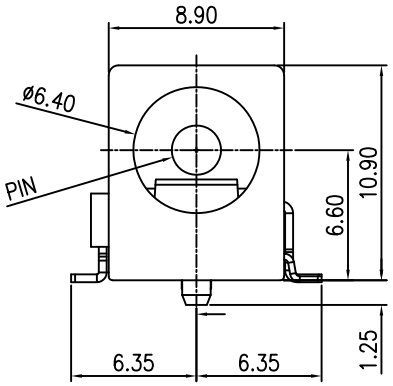

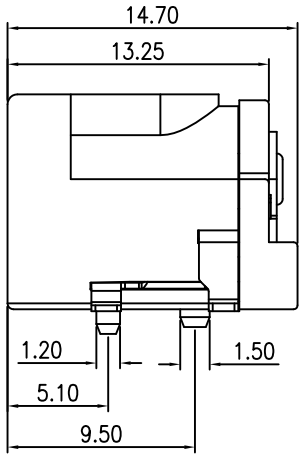

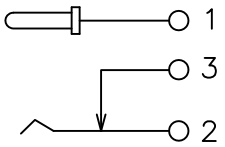

C CIRCUIT DIAGRAM

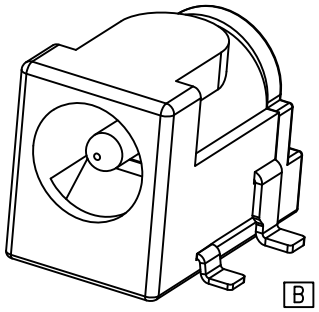

B

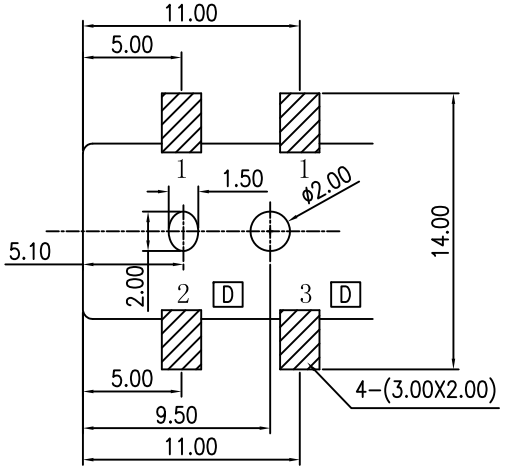

RECOMMENDED PCB LAYOUT TOP VIEW

GENERAL TOLERANCE
X.±
.X± 0.50
.XX± 0.35
.XXX± 0.25

ITEM	NAME	Q'TY	DESCRIPTION	MATERIAL	FINISH / COLOR	NOTE
6	COVER	1		PA9T+30%G.F.	COLOR BLACK	
5	HOUSING	1		PA9T+30%G.F.	COLOR BLACK	
4	CENTER PIN	1		BRASS	NI 60u' MIN. PLATING D	
3	TERMINAL	1		BRASS	SN 60u' MIN. PLATING OVER NI 80u' MIN. PLATING D	
2	TERMINAL	1		PHOSPHOR BRONZE	SN 60u' MIN. PLATING OVER NI 80u' MIN. PLATING D	
1	TERMINAL	1		BRASS	SN 60u' MIN. PLATING OVER NI 80u' MIN. PLATING D	

GENERAL TOLERANCE	ANGLE TOLERANCE
X.±	X°±
.X± 0.38	.X°±
.XX± 0.25	.XX°±
.XXX± 0.15	.XXX°±

MATL	SEE BOM	DRAWN Sun	DATE 01/13/14'
FINISH	SEE NOTES	DESIGN	DATE
SCALE N/A	UNIT mm	CHECKED	DATE
SHEET 1 OF 1		APPROVED	DATE

GENESIS TECHNOLOGY, INC

TITLE: 2.0/2.5mm DC POWER JACK WITH PEG

PART NUMBER: SDC224-X

DRAWING NO. SC-10190 SIZE A4 REV. F